S-DDH1

Motor on board

B4 - WHITE

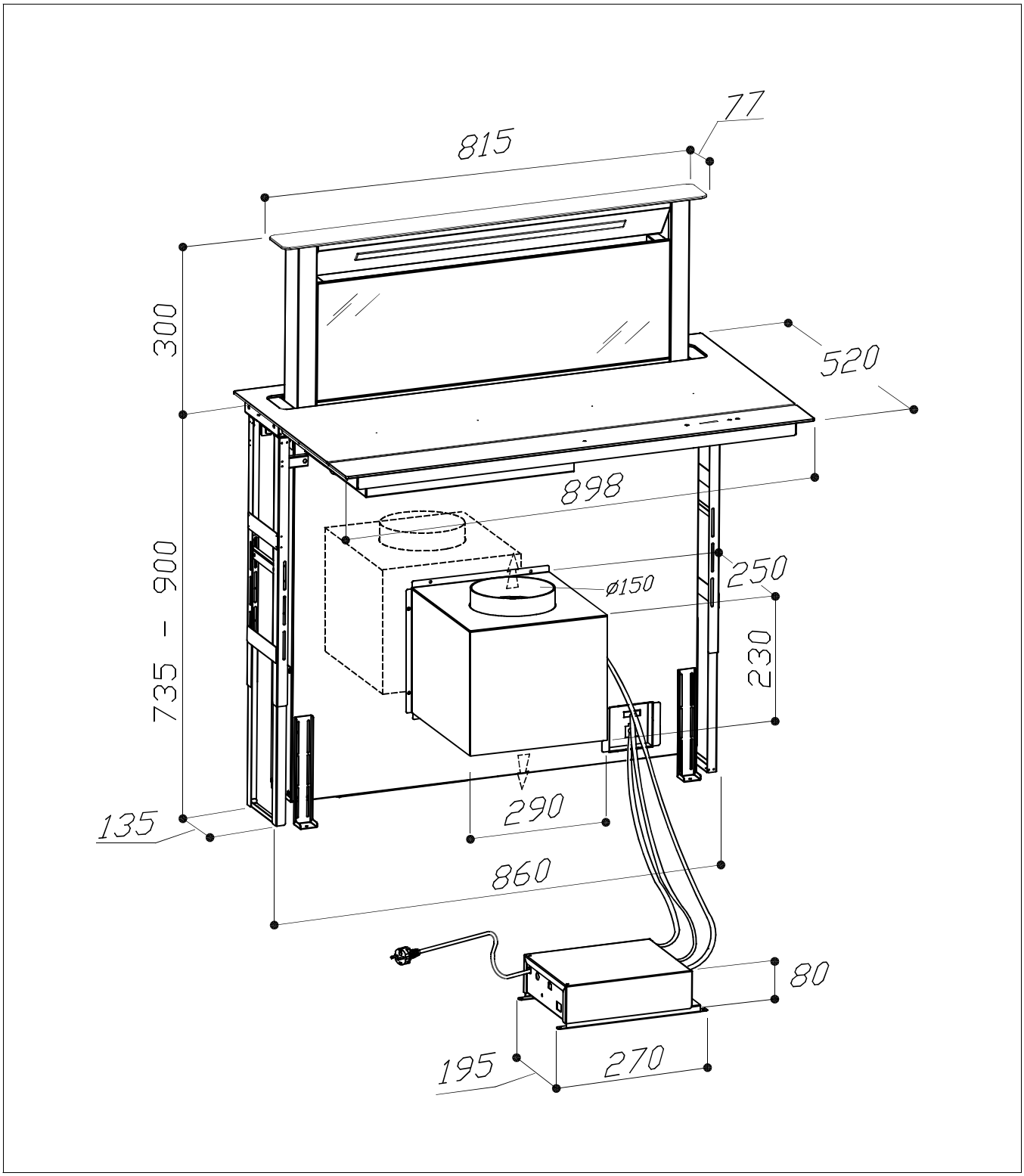

Apertura Top: 860mm X 490mm
Rectangular opening: 860mm X 490mm

06/2025